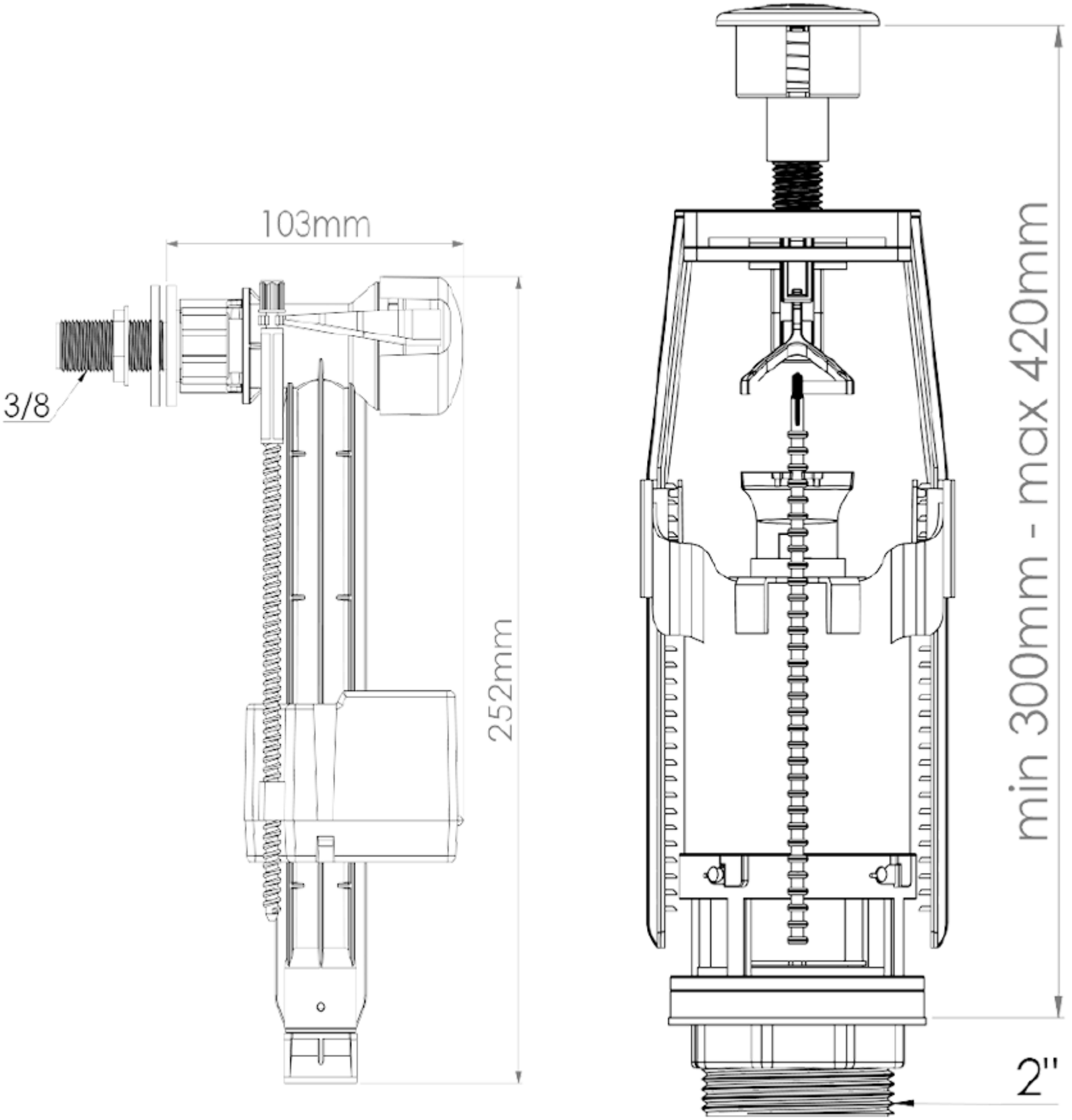
103mm
3/8
252mm
min 300mm - max 420mm
2"