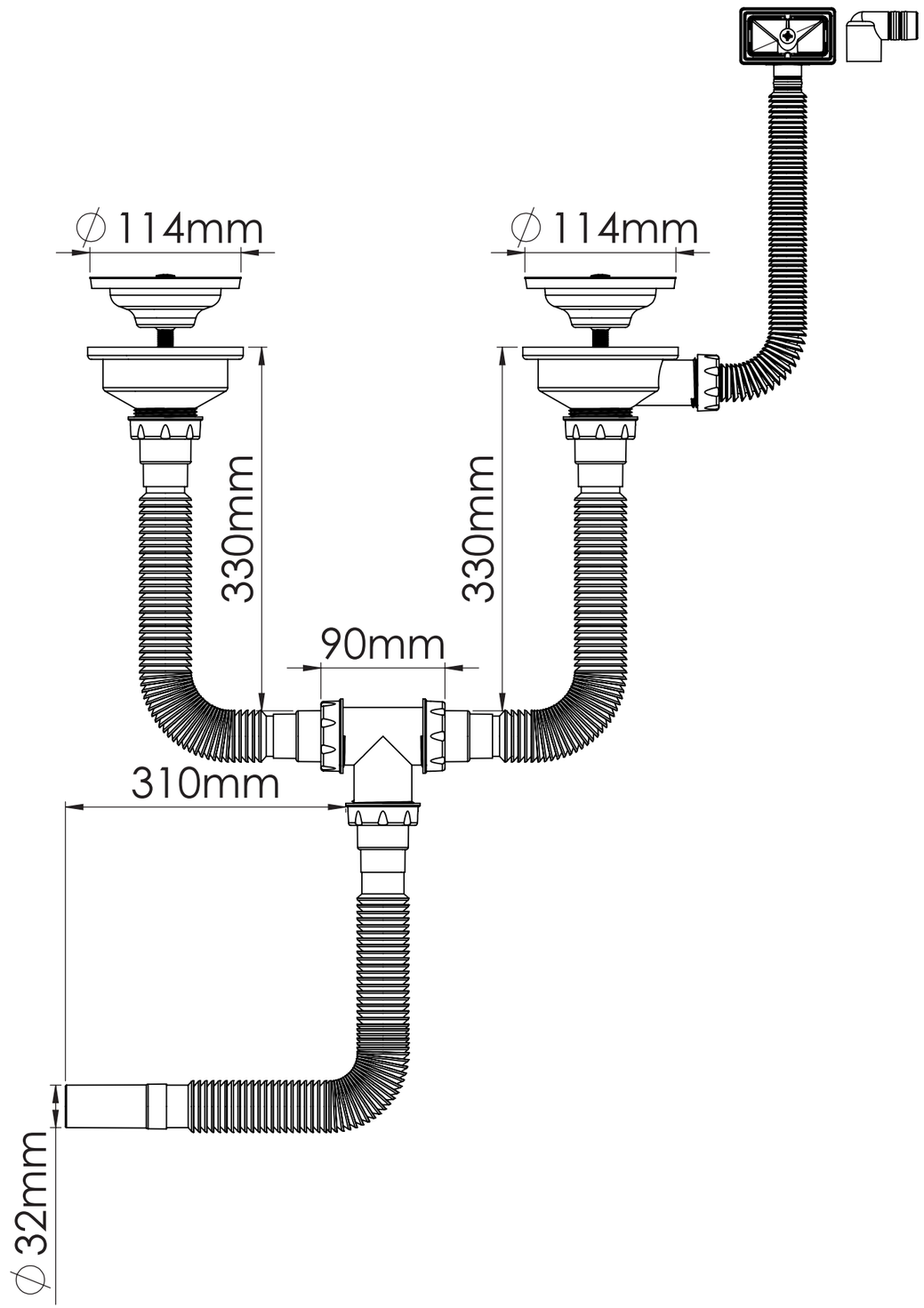
∅114mm
∅114mm
330mm
330mm
90mm
310mm
∅32mm