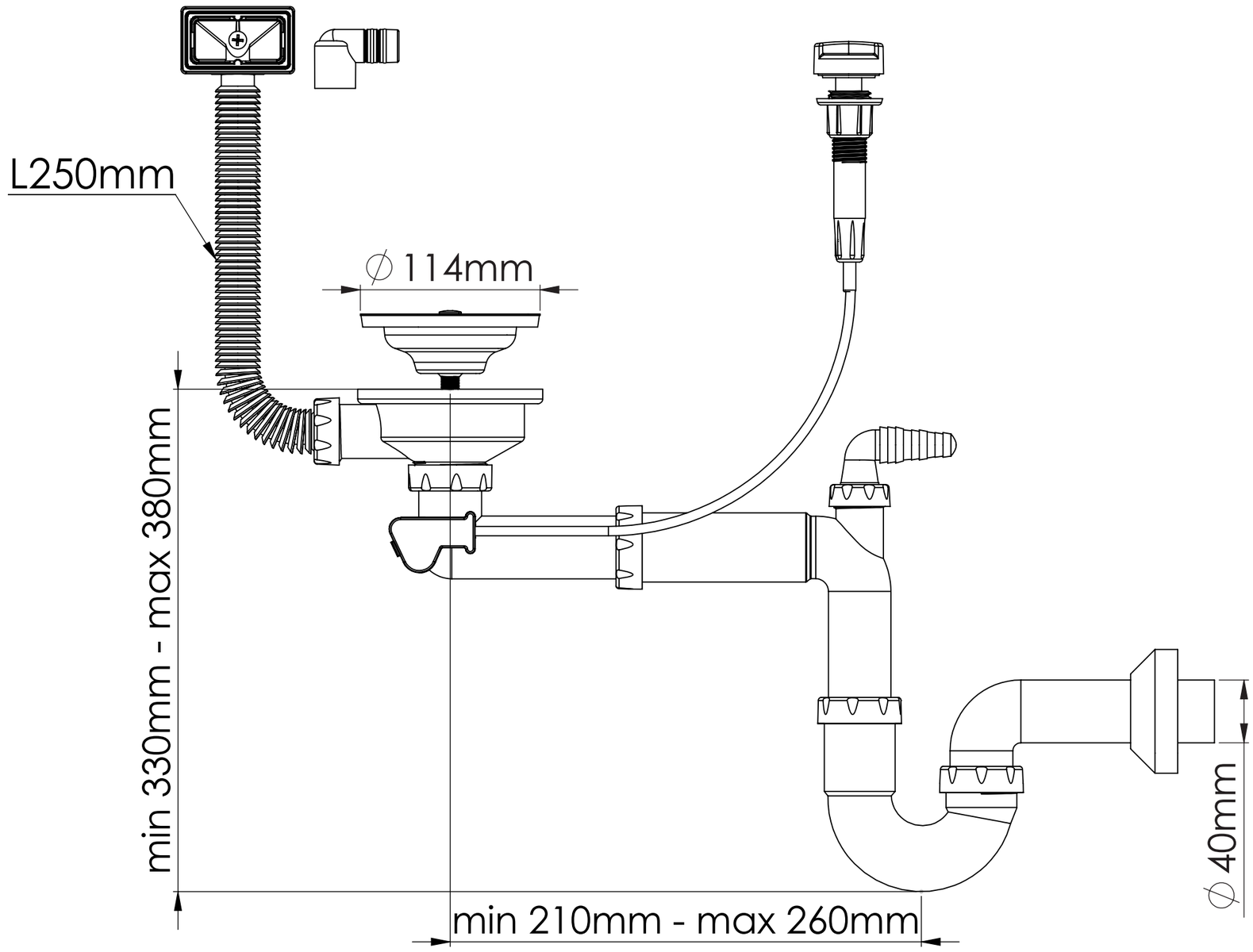
L250mm
∅ 114mm
min 330mm - max 380mm
min 210mm - max 260mm
∅ 40mm